Quick Start Guide

1. Field Application

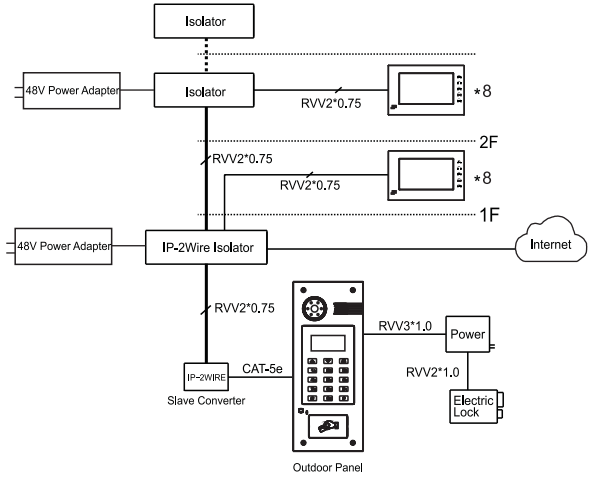

The Isolators are used to extend the Ethernet IP signals via 2Wire cable in the existing 2Wire network of building.

The apartment type of 290 2Wire SIP door phone system can constitute cable structures for all kinds of units. Use digital devices as the terminals and make networking of 2-wire system via intermediate equipment. Bi-directional data penetration of IP and two-wire systems can be realized between devices.

This system is suited for transformation project of old buildings which can remain 2Wire cables. It can save troubles of cable wiring and infrastructure rebuilding as well as, reduce the cost of projects.

2. Connection Diagram

290A(2Wire IP Isolator):

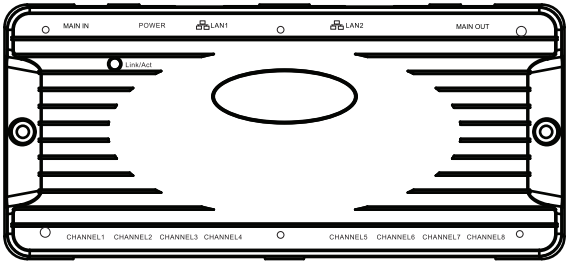

290AB(Isolator):

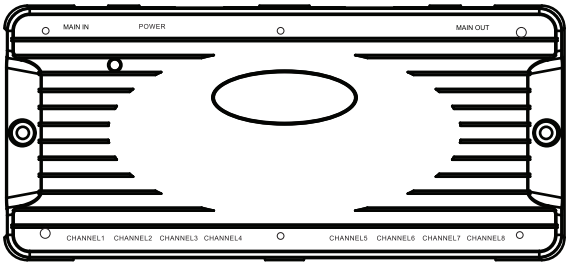

Voltage: DC 48V

Rated power: 4W(290A)

2W(290AB)

Max connection:

Every 290A or 290AB support 60W power and connection to max 8 indoor monitors.

Distance:100m, if there is cascade connection with 290AB, it can connect to max 24 indoor monitors.

50m, if there is cascade connection with 290AB, it can connect to max 32 indoor monitors.

Note: If more than 32 indoor monitors are required, please call DNAKE tech-supporting and customer center.

3. Installation Steps

Step 1. Hardware Check and Preparation

- Please check if there is any product defect.
- Prepare :

  1) Network cable
  2) 2Wire cable
  3) 48VDC Power supply to 290A or 290AB.(Please check the cable length, spec, and connection status.)
  4) 2.0/2.5mm Slot Screw Driver.

Step 2. Installation

- In general, 290A is set in weak power box on the first floor. Every unit has only one 290A to realize the function of management.
- Interface "Main In" is connected to outdoor panel and interface "Main Out" is used for cascade expansion of 290AB. Two network interfaces have switch function and support networking.
- Connect a 48V DC power supply into 290A or 290AB to provide power to the sub-system, including the outdoor panel and indoor monitor.
- All devices are in 2Wire Link Mode. They will find each other and establish basic level encrypted communication.

4. LED Indicator

290A provides green and red LEDs to indicate the status of Link/Act.

- Red LED means the connection status of 2-wire cable. If the red LED is always on, it means 2Wire Link Mode. If the LED flashes slowly, it means 2Wire Unlink Mode.
- Green LED is the Ethernet connection indicator. When the module is transmitting or receiving through Ethernet, the LED toggles with 250ms period.

Installation Warnings

Do not use the isolator near the harsh (temperature, humidity, cabling quality) installation site.

If the isolator is flooded with water or other liquid materials, please turn off the power source , disconnect all the cables of the isolator and contact DNAKE technical team for after service.

Do not use isolator under the condition of temperature over 50℃ for isolator's operation performance and lifetime.